Product data sheet
Characteristics

BRS3ACW850ABA
3-phase stepper motor - 13.5 Nm - shaft Ã˜19mm - L=180mm - w/o brake - term box

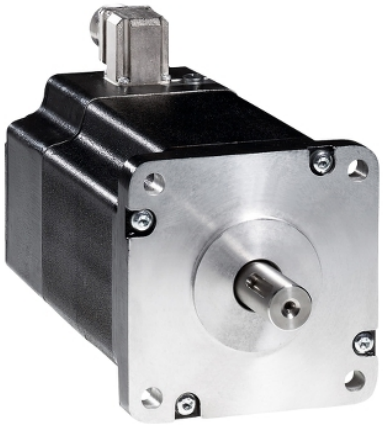

Main

Range compatibility	Lexium SD3
Product or component type	Motion control motor
Device short name	BRS3
Maximum mechanical speed	3000 rpm
Motor type	3-phase stepper motor
Number of motor poles	6
Supply voltage limits	230 V AC 325 V DC
Mounting support	Flange
Motor flange size	110 mm
Length	180 mm
Centring collar diameter	56 mm

Complementary

Centring collar depth	3 mm
Number of mounting holes	4
Mounting holes diameter	9 mm
Circle diameter of the mounting holes	125.86 mm
Electrical connection	Terminal box
Holding brake	Without
Shaft end	Parallel key
Second shaft	Without second shaft end
Shaft diameter	19 mm
Shaft length	40 mm
Nominal torque	12 N.m
Peak stall torque	11.42 N.m
Continuous stall torque	11.42 N.m
Holding torque	13.5 N.m
Rotor inertia	10.5 kg.cm²
Resolution	1.8 °, 0.9 °, 0.72 °, 0.36 °, 0.18 °, 0.09 °, 0.072 °, 0.036 ° step angle 200, 400, 500, 1000, 2000, 4000, 5000, 10000 steps number of full steps per revolution
Accuracy error	+/- 6 arc min
Maximum starting frequency	4.7 kHz
[In] rated current	4.1 A
Resistance	1.8 Ohm (winding)
Time constant	22 ms
Maximum radial force Fr	150 N (second shaft end) 300 N (first shaft end)
Maximum axial force Fa	330 N (tensile force) 60 N (force pressure)
Service life in hours	20000 h (bearing)
Angular acceleration	200000 rad/s²
Net weight	8.2 kg

The information provided in this documentation contains general descriptions and/or technical characteristics of the performance of the products contained herein.
This documentation is not intended as a substitute for and is not to be used for determining suitability or reliability of these products for specific user applications.
It is the duty of any such user or integrator to perform the appropriate and complete risk analysis, evaluation and testing of the products with respect to the relevant specific application or use thereof.
Neither Schneider Electric Industries SAS nor any of its affiliates or subsidiaries shall be responsible or liable for misuse of the information contained herein.

Environment

Standards	IEC 50347 IEC 60072-1
Type of cooling	Natural convection
Ambient air temperature for operation	-25…40 °C
Ambient air temperature for storage	-25…70 °C
Operating altitude	<= 1000 m without power derating
Relative humidity	15…85 % without condensation
Vibration resistance	20 m/s² maximum A conforming to IEC 60034-14
IP degree of protection	IP41 shaft bushing: conforming to IEC 60034-5 IP56 total except shaft bushing: conforming to IEC 60034-5
Temperature class	F winding conforming to IEC 60034-1

Packing Units

Unit Type of Package 1	PCE
Number of Units in Package 1	1
Package 1 Height	22.000 cm
Package 1 Width	19.500 cm
Package 1 Length	40.000 cm
Package 1 Weight	9.079 kg
Unit Type of Package 2	P06
Number of Units in Package 2	12
Package 2 Height	75.000 cm
Package 2 Width	60.000 cm
Package 2 Length	80.000 cm
Package 2 Weight	117.448 kg

Offer Sustainability

Sustainable offer status	Green Premium product
REACh Regulation	REACh Declaration
EU RoHS Directive	Pro-active compliance (Product out of EU RoHS legal scope)
Mercury free	Yes
China RoHS Regulation	China RoHS Declaration
RoHS exemption information	Yes
Environmental Disclosure	Product Environmental Profile
Circularity Profile	No need of specific recycling operations
WEEE	The product must be disposed on European Union markets following specific waste collection and never end up in rubbish bins
PVC free	Yes

Contractual warranty

Warranty	18 months

BRS3ACW850ABA

Dimensions

3-Phase Stepper Motor in Terminal Box Version

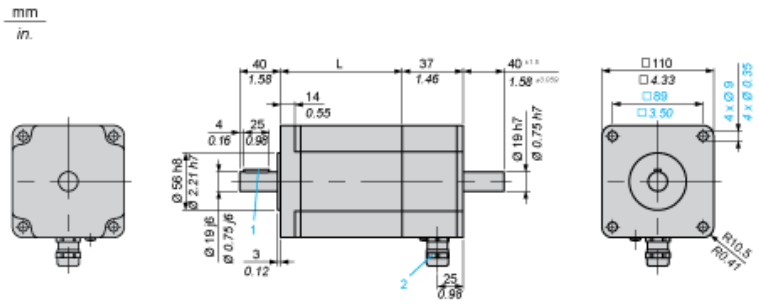

Dimensions in mm

L	Parallel key DIN 6885 (1)	Cable gland (2)
180 ±1	6 x 6 x 25	ISO M20 x 1.5

Dimensions in in.

L	Parallel key DIN 6885 (1)	Cable gland (2)
7.09 ±0.039	0.24 x 0.24 x 0.98	ISO M20 x 1.5

BRS3ACW850ABA

Torque Characteristics

Measurement at 1000 Steps/Revolution, Nominal Voltage DC Bus U_N and Phase Current I_N

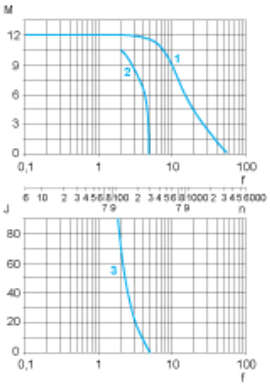

M : Torque in Nm
n : Speed in rpm
f : Frequency in kHz
J : Rotor inertia in $kg.cm^2$
1 : Pull-out torque
2 : Pull-in torque
3 : Maximum load inertia